Reliability Analysis of Drivers for High-Power LEDs

Jesurun Ramesh and Prof. Yoon G. Kim, Electrical and Computer Engineering, Calvin College, Michigan

Calvin COLLEGE 1876

Abstract

The research focuses on the analysis of the reliability of DC-DC switching power converter modules for high-power LED's. LED's make use of driver circuitry that is electronic power converters. The project aims to calculate the reliability of the converter; it involves searching research papers based on similar topics, calculating MTBF(Mean Time Between Failures) and getting equations for testing of constant-current DC-DC converters.

Problem Statement

Need:

One important advantage of LEDs is that they have very long life(50,000Hrs). However, the electronic power (DC-DC) converters in the LED's driver circuitry, which provide LED's with constant current, has a shorter life compared to the LED lamp. As a result we are not able to utilize the full potential of the LED lights.

Objectives:

1. To research papers regarding analysis of Drivers for High-Power LEDs
2. To understand valid methods for analyzing the life of DC-DC converters.

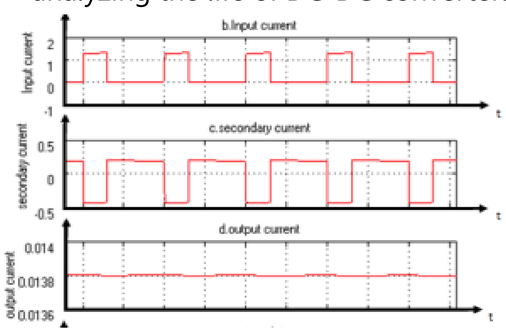

Fig. 1: Constant output current of Flyback converter[4]

Methods

The method involved researching a bunch of related material and scientific papers to determine the optimum way of testing reliability of DC-DC converter.

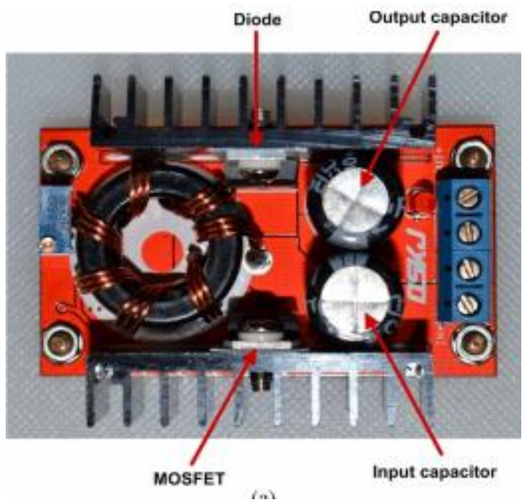

Fig. 2 : Boost converter [4]

After research, this method involved calculating the failure rate and the MTBF(Mean Time Before Failure) of the whole DC-DC converter.

This was done by calculating the individual reliability of the essential components of the converter- MOSFET, Diode, Capacitor, and Inductor- and then adding up all their failure rates.

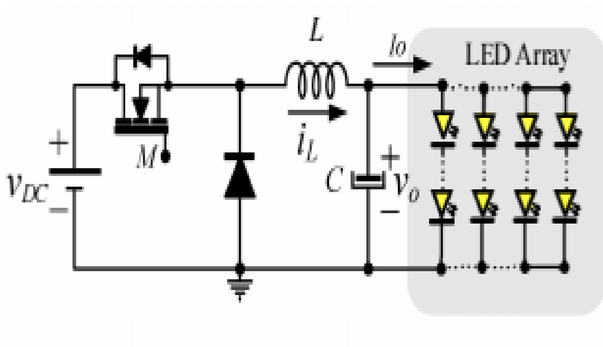

Fig. 3 : Buck converter for power LED array [1]

Results

The equations to calculate the reliability of different converters varies based on the materials and components used. It even varies for the different components of the same converter. However, the general equation that gives an overview of all these equations is given by the Failure rate of the system; it is the sum of all failure rates and Reliability is inverse of failure rate.

$$\mathrm{MTTF} = \int_0^\infty R_s(t)dt = \frac{1}{\lambda_{\mathrm{SYSTEM}}} \quad [4]$$

$$\lambda_{\mathrm{SYSTEM}}(t) = \lambda_{\mathrm{SW}}(t) + \lambda_{\mathrm{CAP}}(t) + \lambda_{\mathrm{DIODE}}(t) + \lambda_{\mathrm{INDUCTOR}}(t) \quad [4]$$

References

[1] M.A Juarez; P.R. Martinez; J.M. Sosa; G. Vasquez; "Comparative Analysis of the Reliability of Drivers for Power LED"Villanueva; Higher Technological Institute of Irapuato. ITESI.

[2]Javadian, y.; Kaboli, S., "Reliability assessment of some high side MOSFET drivers for buck converter," in Electric Power and Energy Conversion Systems (EPECS). 2013 3rd International Conference on ,vol., no., pp.I-6, 2-4 Oct. 2013

[3] Sreedevi, V.T.; Devi, V.; Sunil, AA, "Analysis and simulation of a single stage power supply for LED lighting," Green Computing. Communication and Conservation of Energy (ICGCE), 2013 International Conference on, vol., no., pp.453,457, 12-14 Dec. 2013

[4] Alam, M.K.; Khan, F.H., "Reliability Analysis and Performance Degradation of a Boost Converter," in Industry Applications, IEEE Transactions on, vo1.50, no.6, pp.3986-3994, Nov.-Dec. 2014

[5] Handbook Military MIL-HDBK-217F. "Reliability prediction of electronic equipment"

Future Development

The information accumulated from this project need to be applied in testing the life and the failure rate of the DC-DC converters for power LEDs and used as a means to produce converters with a comparable life to the LED, thus resulting in the increase of net life of the LED.

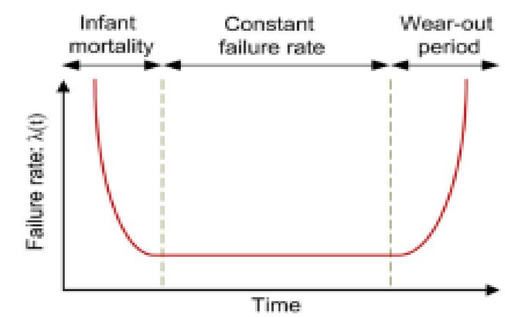

Fig. 4: Bathtub curve for component failure rate [4]

Faith and Engineering

As Christians we believe that our world belongs to God and we are stewards in it. As stewards we have a responsibility to take care and judiciously use the resources we are blessed with. This project furthers our understanding of sustainability.

This project has the potential to increase the life of DC-DC converters which in turn will utilize the full life of LEDs, this can save resources and energy in terms of producing more LEDs and converters otherwise.

Acknowledgements

Calvin Research Fellowship Fund by Calvin College, Grand Rapids, Michigan